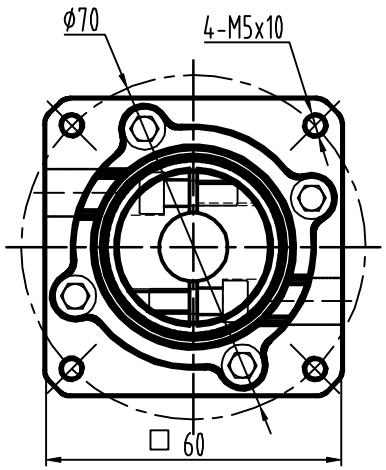

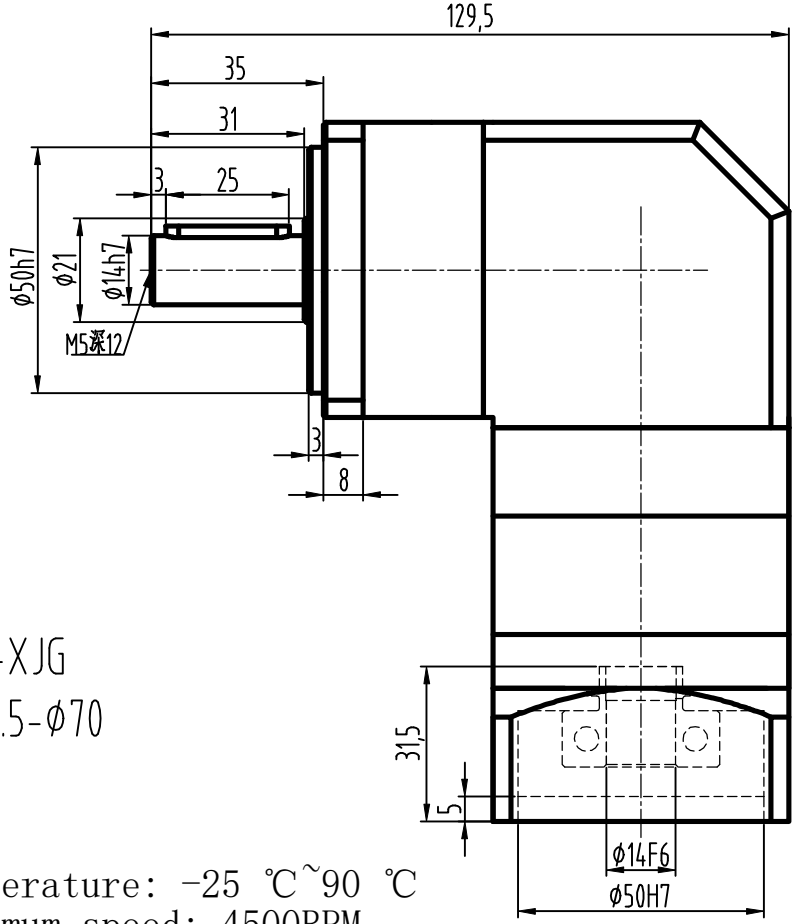

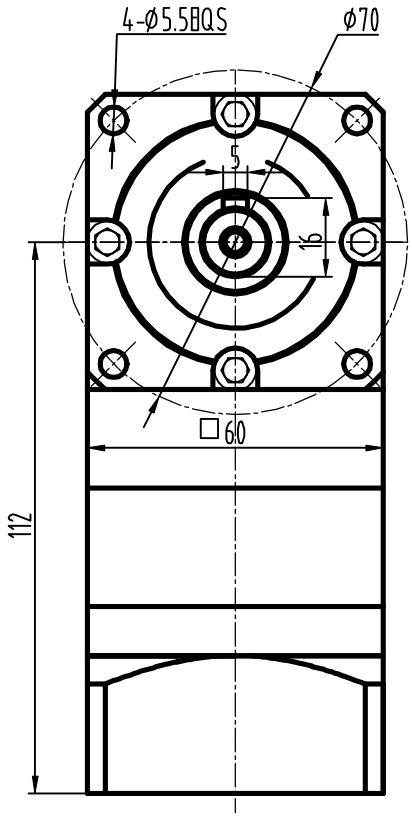

ZAE060-L1-| |-14-002-YT-14-XJG

: Φ14×30/Φ50×3/4-Φ5.5-Φ70

Efficiency: 95%
Rated speed: 3000RPM
Lubrication: Long term
IP code: IP65

Temperature: -25 ℃~90 ℃
Maximum speed: 4500RPM
Service life: 20000h

Ratio	3	4	5	7	10
Rate torque NM	16.5	27	27	19.5	8.5
Max. torque NM	2 time rate torque				
Inertia Kgcm	0.107	0.094	0.092	0.091	0.091
Radial load N	485				
Axial load N	380				

ZAE060-L1

-| |-S2-P2

SOPROLEC