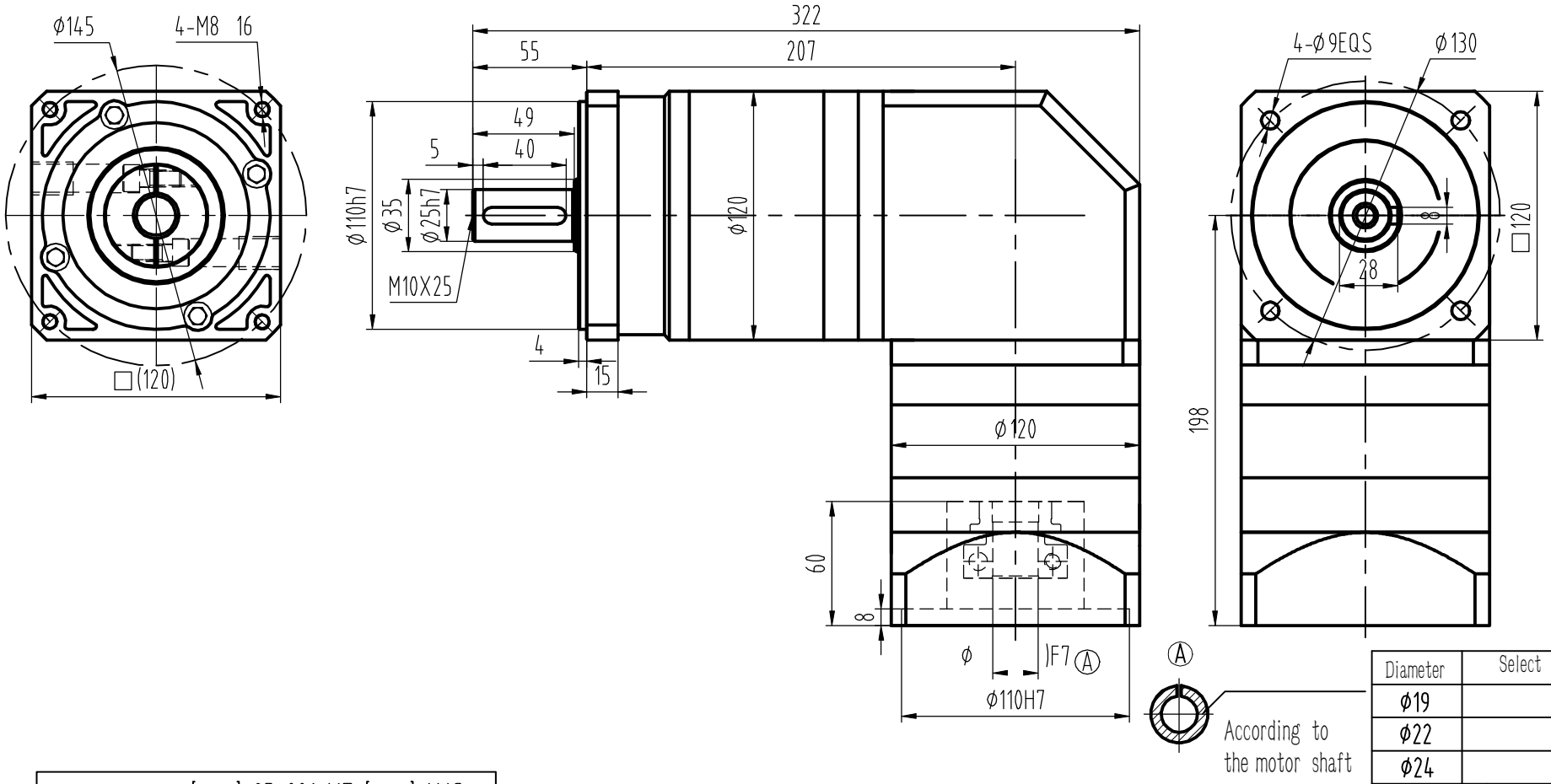


| Diameter | Select (✓) |
|---|---|
| Φ19 | |
| Φ22 | |
| Φ24 | |
| | i= |
| | |

ZAE120-L3-[ ]-25-001-YT-[ ]-XJG

×58/Φ110×4/4-Φ9-Φ145

| Ratio | 64 | 80 | 100 | 125 | 140 | 175 | 200 | 250 | 280 | 350 |
|---|---|---|---|---|---|---|---|---|---|---|
| Rate torque NM | 310 | 310 | 310 | 329 | 310 | 329 | 310 | 329 | 310 | 329 |
| Max.torque NM | 2 time rate torque | | | | | | | | | |
| Inertia kgcm2 | 1.15 | 1.15 | 1.15 | 1.15 | 1.35 | 1.13 | 1.11 | 1.11 | 1.11 | 1.11 |
| Radial load N | 2230 | | | | | | | | | |
| Axial load N | 1550 | | | | | | | | | |

ZAE120-L3-[ ]-S2-P2

SOPROLEC