| | |
|---|---|
| Rated Voltage (Vac) | **220** |
| Rated Power (w) | **1300** |
| Rated Torque (N.m) | **8.34** |
| Peak Torque (N.m) | **21.87** |
| Rated Speed (rpm) | **1500** |
| Peak Speed (rpm) | **4500** |
| Rated Current (Amp) | **9.3** |
| Peak Current (Amp) | **27.9** |
| Torque Const (N.m/Amp) | **0.86** |
| Back EMF Const(V/Krpm) | **52.4** |
| Resistance(Ω) | **0.58±10%** |
| Inductance(mH) | **5.8±20%** |
| Inertia (kg*m$^2$*10$^{-4}$) | **18.7** |
| Poles | **10** |
| Encoder type | **23bit optical** |
| IP rating | **IP67** |
| Mass (Kg) | **7.0** |
| Allowable radial load(N) | **686(P)** |
| Allowable thrust load(N) | **196** |

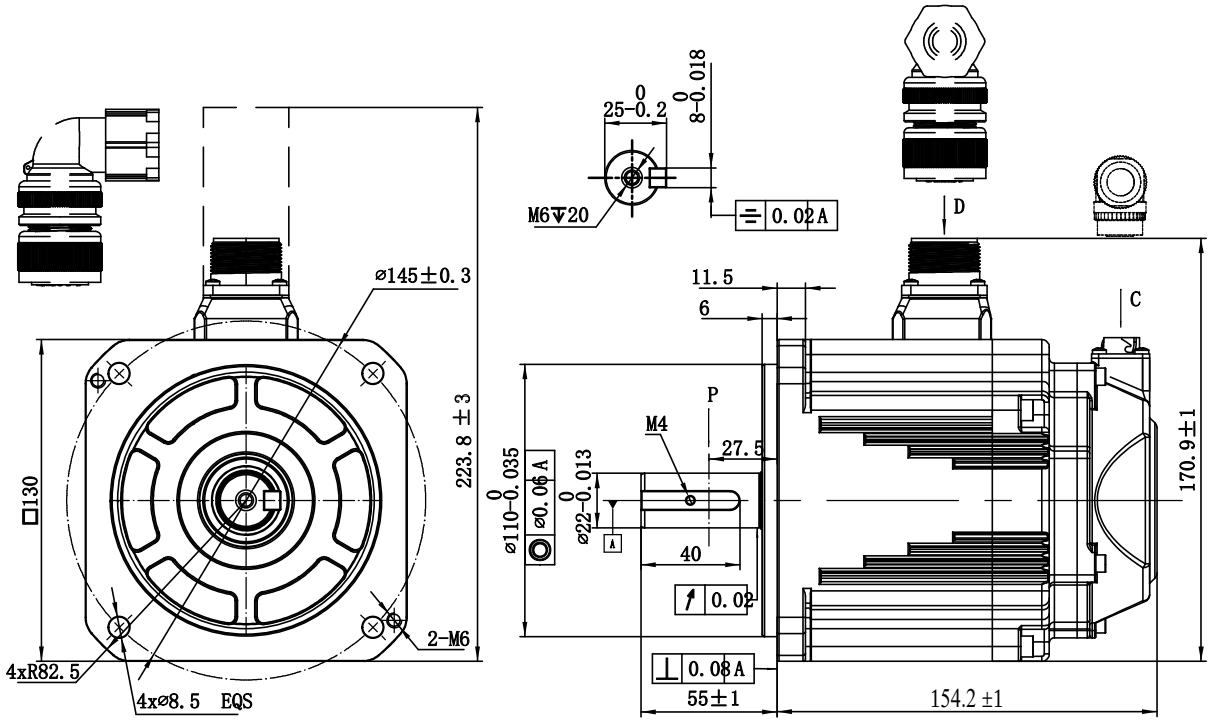


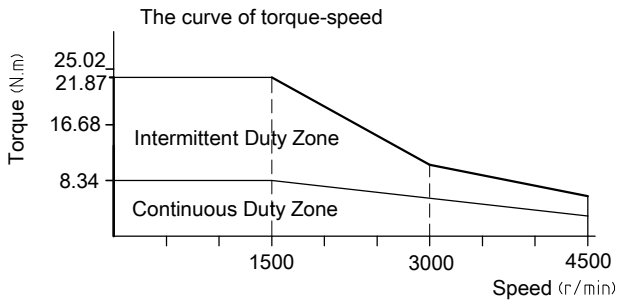


D

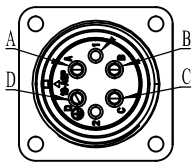


| Assignment of power connector | | | | |
|---|---|---|---|---|
| **Pos** | A | B | C | D |
| **Signal** | U | V | W | PE |
| **Color** | Blue | Black | Red | Yellow/green |

C

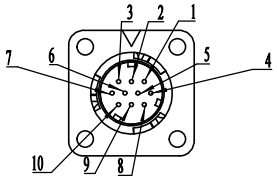


| Assignment of encoder connector | | | | | | | |
|---|---|---|---|---|---|---|---|
| **Pos** | 2 | 3 | 4 | 5 | 6 | 7 | 10 |
| **Signal** | 5V | 0V | SD+ | SD- | BAT+ | BAT- | PE |

Leadshine Technology Co .Ltd

# ELM2H-1300LD130F-H

130mm , high inertia ,**1300** w servo motor
23bit optical encoder, no brake