Rated Voltage (Vac)	**400**
Rated Power (w)	**1300**
Rated Torque (N.m)	**8.34**
Peak Torque (N.m)	**23.8**
Rated Speed (rpm)	**1500**
Peak Speed (rpm)	**4500**
Rated Current (Amp)	**4.6**
Peak Current (Amp)	**13.8**
Torque Const (N.m/Amp)	**1.74**
Back EMF Const(V/Krpm)	**104.9**
Resistance(Ω)	**2.26±5%**
Inductance(mH)	**23.3±20%**
Inertia (kg*m^2*10^{-4})	**21**
Poles	**10**
Encoder type	**23bit optical**
IP rating	**IP67**
Mass (Kg)	**8.6**
Allowable radial load(N)	**686(P)**
Allowable thrust load(N)	**196**

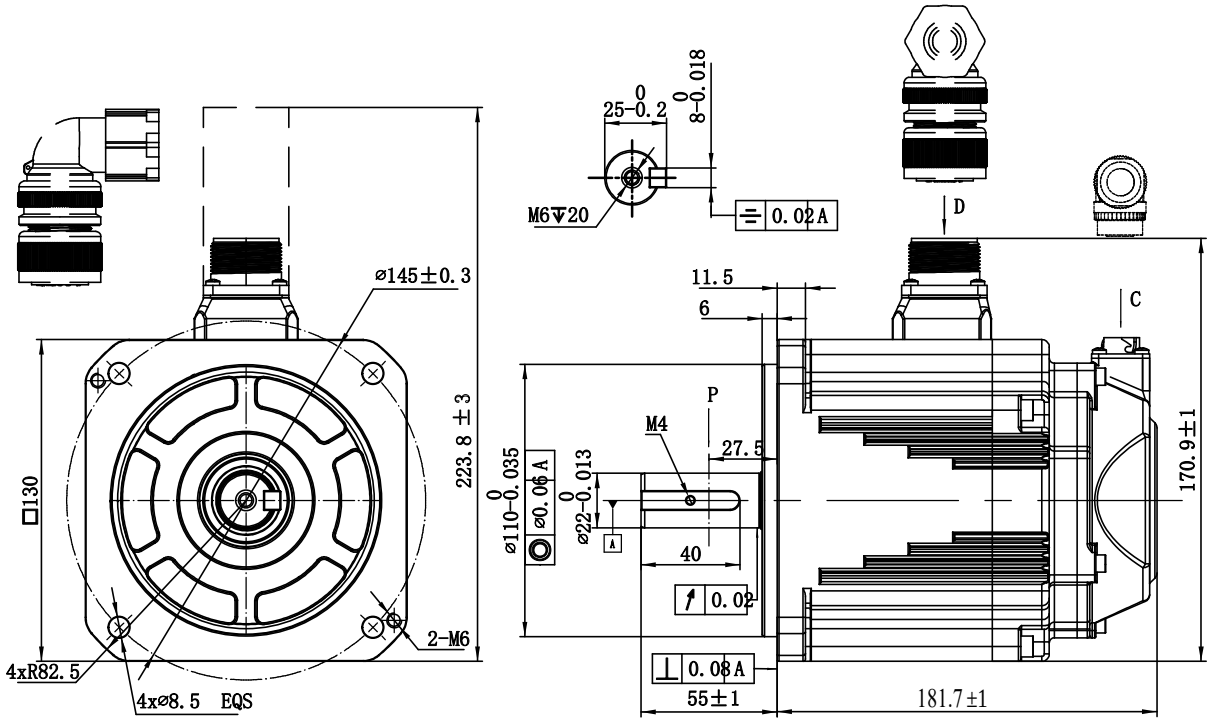

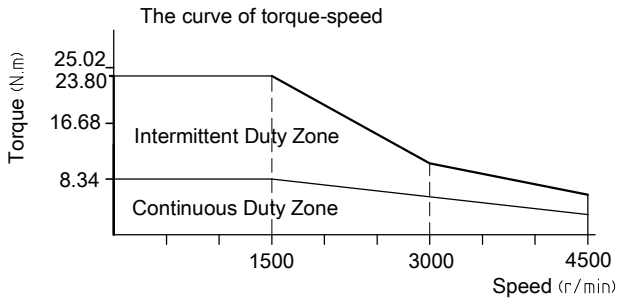

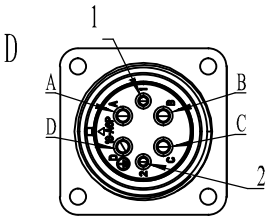

Assignment of power connector with brake						
Pos	A	B	C	D	1	2
Signal	U	V	W	PE	0	24V

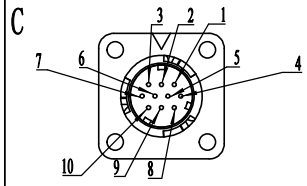

Assignment of encoder connector							
Pos	2	3	4	5	6	7	10
Signal	5V	0V	SD+	SD-	BAT+	BAT-	PE

Leadshine Technology Co .Ltd

ELM2H-1300LD130ET-H

130mm , high inertia ,**1300** w servo motor
23bit optical encoder, with brake